Bonded pocket for SFK(H)01/02/03

thermokon®
HOME OF SENSOR TECHNOLOGY

Subject to technical alteration
2018-10-26 • A001

Order Information

Type	Total length	Inside length	Length L1	Art. No.
Type ESH60	60 mm	55 mm	35 mm	319096
Type ESH110	110 mm	105 mm	58,5 mm	103459
Type ESH160/170	170 mm	165 mm	100 mm	103466
Type ESH210	210 mm	205 mm	140 mm	103473
Type ESH260	260 mm	250 mm	190 mm	173247

Technical Data in Detail
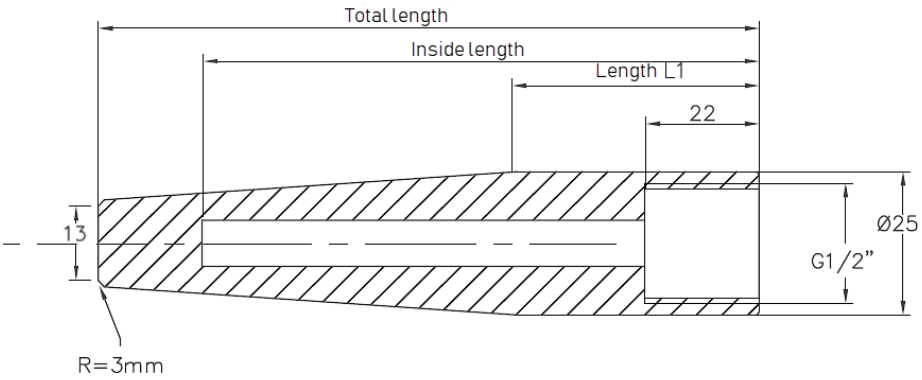
PU	1 pc.
Material	ST52.3 (1.0570)
Compressive strength	Up to 100 bar
Ambient temperature	-80..+ 260 °C
Description	Accessories SFK(H)01/02/03 (for sensor probe Ø 8 mm) For the use of immersion sensors in systems with high pressure
Dimensions (mm)