FTA54+ LCD

Outdoor sensor for relative humidity and temperature

thermokon®
HOME OF SENSOR TECHNOLOGY

Datasheet

Subject to technical alteration
Issue date: 03.04.2018 • A002

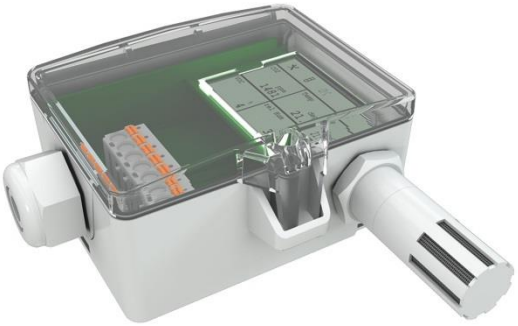

Application

Sensor for measuring humidity and temperature in outdoor areas. In delivery condition, the sensor is designed for measuring temperature and relative humidity. Alternatively the output can be set to absolute humidity, enthalpy or dew point (depending on the model, changeable via jumper or using Thermokon USEapp). LCD models with RGB background light have a transparent cover. Display configuration and threshold values for color changes can be parameterized via Thermokon USEapp. With the option board relay two-point controllers or a 2-stage 2-point controller for temperature or humidity can be realized. A mounting base for mounting on a level surface and fixing material are included in delivery.

Types Available

Outdoor humidity sensor with display temperature + humidity – active 2x 0..10 V | 4..20 mA | Relay

FTA54+ LCD VV
FTA54+ LCD AA
FTA54+ LCD VV Relay

Options: Additional passive temperature sensor (type VVS|AAS)
eg: PT100/PT1000/NI1000/NI1000TK5000/NTC10K... and other sensors on request.

Security Advice – Caution

The installation and assembly of electrical equipment should only be performed by authorized personnel.

The product should only be used for the intended application. Unauthorised modifications are prohibited! The product must not be used in relation with any equipment that in case of a failure may threaten, directly or indirectly, human health or life or result in danger to human beings, animals or assets. Ensure all power is disconnected before installing. Do not connect to live/operating equipment.

Please comply with

- Local laws, health & safety regulations, technical standards and regulations
- Condition of the device at the time of installation, to ensure safe installation
- This data sheet and installation manual

Notes on Disposal

As a component of a large-scale fixed installation, Thermokon products are intended to be used permanently as part of a building or a structure at a pre-defined and dedicated location, hence the Waste Electrical and Electronic Act (WEEE) is not applicable. However, most of the products may contain valuable materials that should be recycled and not disposed of as domestic waste. Please note the relevant regulations for local disposal.

Build-up of Self-Heating by Electrical Dissipative Power

Temperature sensors with electronic components always have a dissipative power, which affects the temperature measurement of the ambient air. The dissipation in active temperature sensors shows a linear increase with rising operating voltage. This dissipative power has to be considered when measuring temperature. In case of a fixed operating voltage (±0,2 V) this is normally done by adding or reducing a constant offset value. As Thermokon transducers work with a variable operating voltage, only one operating voltage can be taken into consideration, for reasons of production engineering. Transducers 0..10 V / 4..20 mA have a standard setting at an operating voltage of 24 V =. That means, that at this voltage, the expected measuring error of the output signal will be the least. For other operating voltages, the offset error will be increased by a changing power loss of the sensor electronics. If a re-calibration should become necessary later directly on the sensor, this can be done by means of the USEapp software and an optional Bluetooth interface.

Remark: Occurring draft leads to a better carrying-off of dissipative power at the sensor. Thus temporally limited fluctuations might occur upon temperature measurement.

Application Notice for Humidity Sensors

Refrain from touching the sensitive humidity sensor/element. Touching the sensitive surface will void warranty.

For standard environmental conditions re-calibration is recommended once a year to maintain the specified accuracy.

When exposed to high ambient temperature and/or high levels of humidity or presence of aggressive gases (i.e. chlorine, ozone, ammonia) the sensor element may be affected and re-calibration may be required sooner than specified. Re-calibration and deterioration of the humidity sensor due to environmental conditions are not subject of the general warranty.

Technical Data

Measuring values	temperature, humidity (humidity output configurable)	
Output voltage	**VV** 2x 0..10 V or 0..5 V, min. load 10 kΩ (live-zero configuration via Thermokon USEapp)	
Output Amp	**AA** 2x 4..20 mA, max. load 500 Ω	
Output passive	**passive** Options: additional passive temperature sensor eg: PT100/PT1000/NI1000/NI1000TK5000/NTC10K... and other sensors on request	
Output switching contact	**Relay** 2 floating contacts for 24 V ~ or 24 V = / 3 A	
Power supply	**VV | Relay** 15..35 V = or 19..29 V ~	**AA** 15..35 V =
Power consumption	max. 2,3 W (24 V =) | 4,3 VA (24 V ~)	
Measuring range temp	**VV | AA | Relay** -20..+80 °C (default setting), optionally configurable via Thermokon USEapp	**passive** -20..+70 °C
Measuring range humidity	0..100% rH non-condensing, optionally configurable via Thermokon USEapp (enthalpy, absolute humidity, dew point)	
Accuracy temperature	typ. 0,3 K (typ. at 21 °C)	
Accuracy humidity	±2% between 10..90% rH (typ. at 21 °C)	
Display	LCD 29x35 mm with RGB backlight	
Enclosure	enclosure USE-M, PC, pure white, cover PC, transparent, with removable cable entry	
Protection	IP65 according to EN 60529	
Cable entry	**VV | AA** Flextherm M16, for wire Ø=3..7 mm, removable	**Relay** M25 with fourfold cable entry for wire with max. Ø=7 mm, removable
Connection electrical	removable plug-in terminal, max. 2,5 mm²	
Pipe	PC, pure white	
Filter	stainless steel wire mesh	
Ambient condition	-20..+70 °C, max. 85% rH short term condensation	
Notes	additional passive sensor available (type VVS | AAS)	

Configuration

The Thermokon bluetooth dongle with micro-USB is required for communication between USEapp and USE-M / USE L (Item No..: 668262). Commercial bluetooth dongles are not compatible.

Application-specific reconfiguration of the devices can be carried out using the Thermokon USEapp. The configuration is carried out in the voltage-supplied state.

The configuration-app and the app description can be found in the Google Play Store or in the Apple App Store.

Application notice

The housing cover must be completely closed in order to ensure the accuracy and reproducibility of the measured values during a test or service log via USEapp.

The Bluetooth dongle snaps into the socket easily. When removing, please fix the plug-in card (option PCB) so that it is not unintentionally pulled out.

After a certain time, dirt in the air can collect on the filter and then adversely affect the operation of the sensor. Under normal ambient condition an annual maintenance is recommended. Rinse the filter after cleaning with distilled water and dry it using clean oil-free air or nitrogen. Extremely contaminated filters should be replaced. At extreme ambient conditions, e.g. corrosive gases, the humidity sensor may have to be changed.

Mounting Advices

In case of outdoor installation avoid direct rain and sun contact. Probably use sun respectively rain protection. Cable entry from bottom or side. For side cable routing set loop so that precipitation can drain defined. Observe permissible ambient condition.

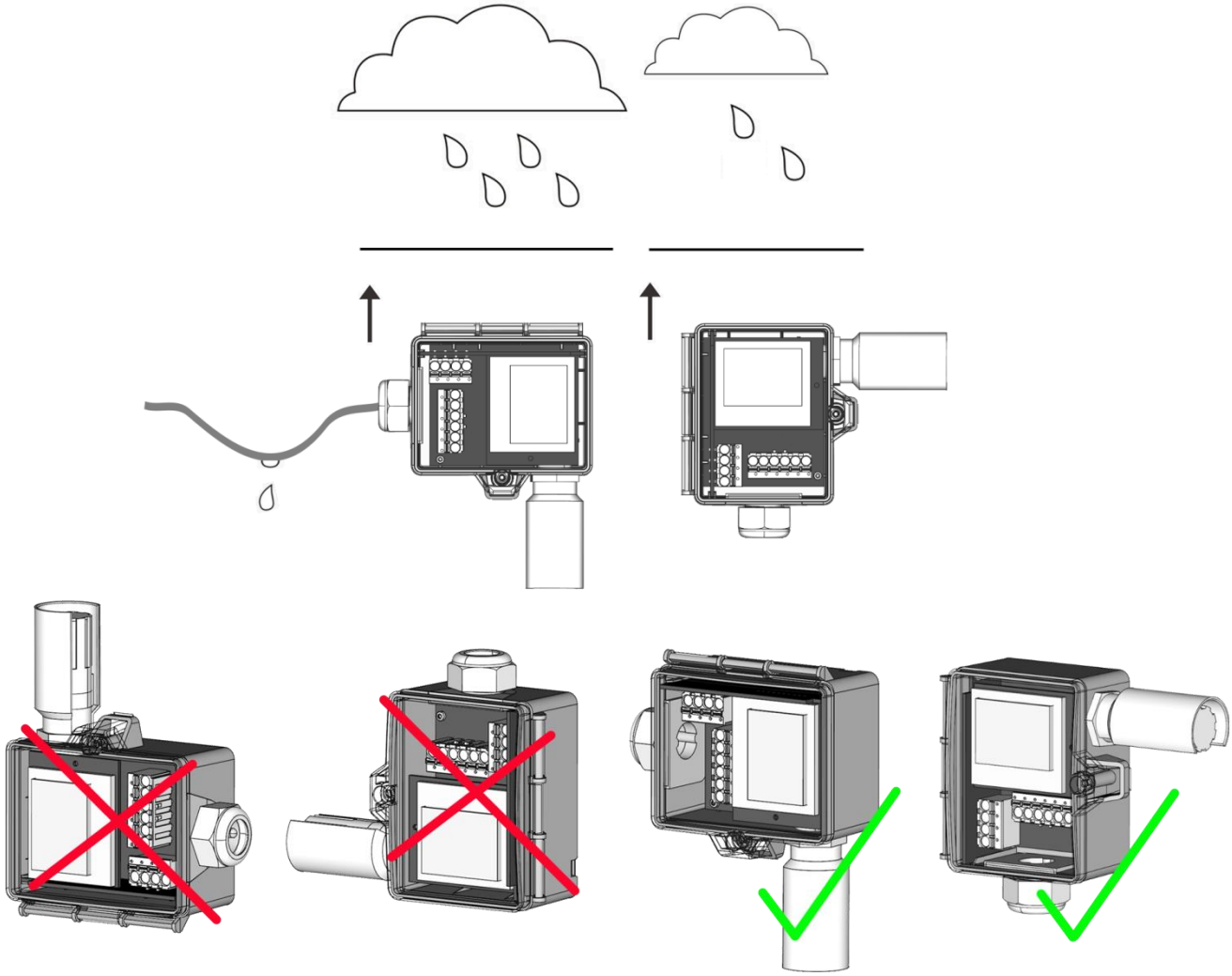

Connection Plan

To change the output voltage range (default 0..10 V to 0..5 V) via jumper, the display must be removed from the board first.

FTA54+ **LCD VV**

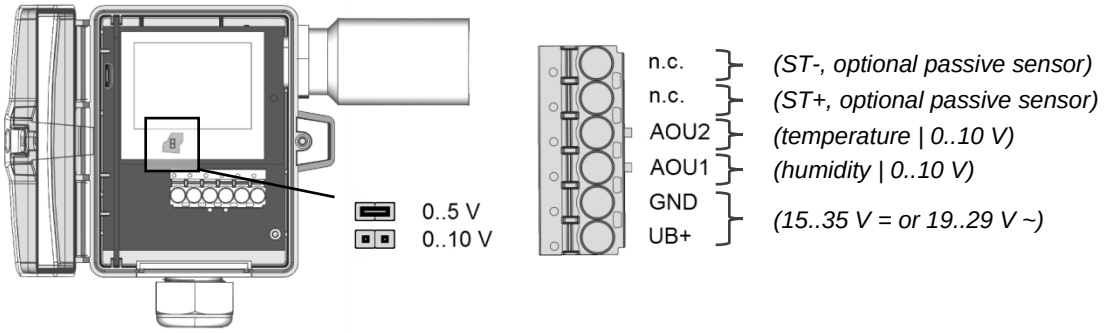

FTA54+ **LCD AA**

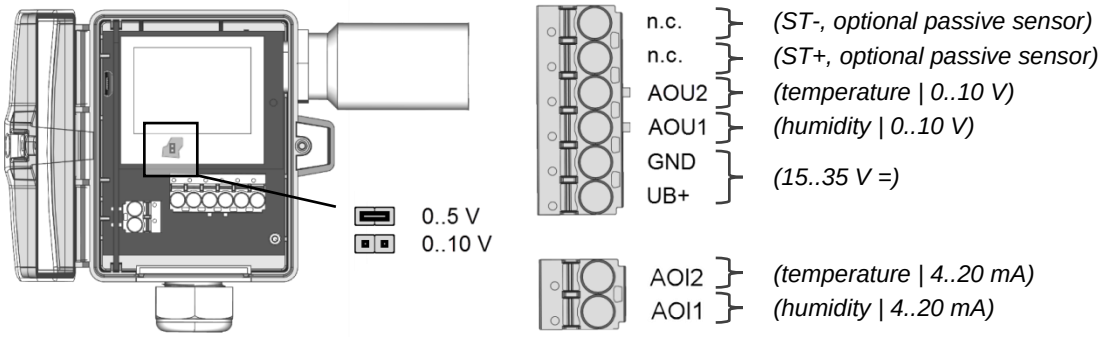

FTA54+ **LCD VV Relay**

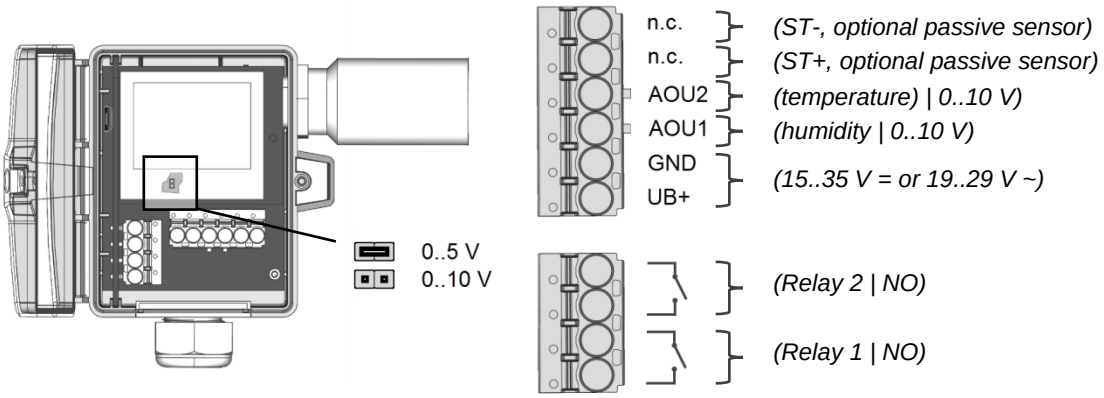

Dimensions (mm)

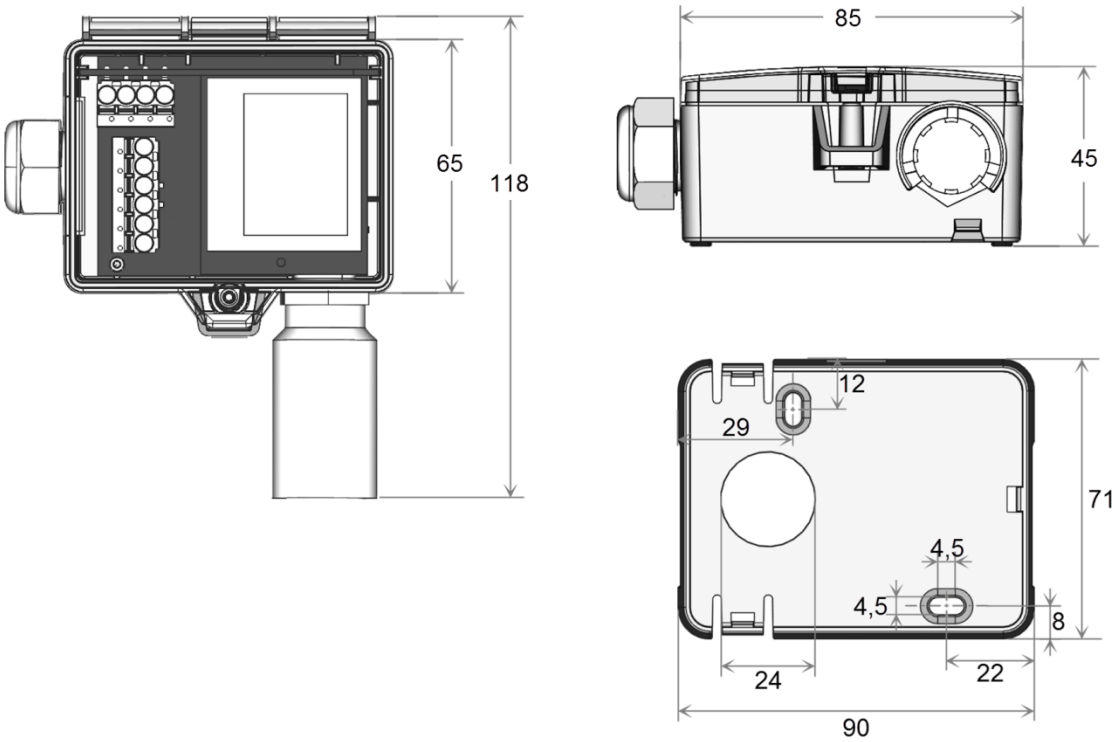

Accessories (included in delivery)

Rain protection	Item No. 670715
Mounting base	Item No. 631228
Mounting kit universal	Item No. 698511

• Cover screw + screw cover• 2 Rawlplugs • 2 Screws (countersunk head) • 2 Screws (rounded head)

Accessories (optional)

Bluetooth dongle	Item No. 668262
Cable entry M25 USE white, sealing insert 4x Ø=7 mm (4 pcs)	Item No. 641364
Filter stainless steel, wire mesh	Item No. 231169
M16 Sealing inserts cable entry (packaging unit 10 pcs.) for wire with Ø 8 mm	Item No. 641340